ACKERMANN
by Honeywell

Intelligent Life Care

White Paper: Nurse Call Systems and IT Networks

Creating Synergies through Integrated System Landscapes

Savings and process optimization

The saving potential of a common infrastructure is quite obvious: Standard components and lines are shared, value added services and convenient functions can be individually brought to the point of care. Standard terminal equipment simplifies service and allows to easily exchange or expand devices in rooms. Additional functions such as presence and call logging as well as secondary alarms support care processes and subsequent billing.

Migration strategy integrates nurse call and IP

The merging of system environments through IT infrastructures is not only advantageous, however, as the life-cycles of network technology are significantly shorter than those of call systems. In order to prevent service and operation costs from increasing unnecessarily, a lasting solution must guarantee expansions and changes to the system landscape in future as well. Only a migration strategy which intelligently networks nurse call and IP and combines the advantages of both worlds can offer long-term investment security.

High costs for full IP solution

The most important point is and has always been the safety of the patients and personnel, even if higher costs are eventually entailed. It is a technical and organizational challenge to meet the safety specifications of the DIN VDE 0834 by exclusively using IP technology. It is especially difficult to set up and maintain system reliability as well as specifications regarding call prioritization, fault susceptibility and emergency operation. The technical and organizational conditions need to be continuously monitored and regularly cross-checked during running operations. Also taking revision aspects and potential claims for compensation into consideration, health care market providers need to make sure they use fail-safe solutions.

Conclusion

In order to work economically over the long-term, hospitals and care facilities must take advantage of every opportunity to use modern IP technologies. In doing so they will create more safety and comfort, new sources of revenue will open up and their processes will become more efficient. Ultimately, it depends on the respective application, if full IP networking is the optimum solution both in terms of reliability and economic efficiency.

The use of hybrid solutions (such as the Clino System 99) is ideal in minimizing all risks while simultaneously using the potential of the IT world. By using intelligent networking of proprietary systems and standardized network technology this strategy creates a reliable and flexible platform for optimal care communication - now and for the future.

Novar GmbH a Honeywell Company
Dieselstraße 2
41469 Neuss, Germany
Phone: +49 2137 17-0 (Administration)
Phone: +49 2137 17-600 (Customer Service Center)
Fax: +49 2137 17-286
Internet: www.ackermann-clino.com
E-mail: info@www.ackermann-clino.com

Honeywell Life Safety Austria GmbH
Lemböckgasse 49
1230 Vienna, Austria
Phone: +43 1 600 6030
Fax: +43 1 600 6030-900
Internet: www.hls-austria.at
E-mail: hls-austria@honeywell.com

Part No. 795944.G0
January 2011
Subject to change without notice

ACKERMANN
by Honeywell

Safety, Nurse Call Systems and IP Solutions: the DIN VDE 0834

DIN VDE 0834 as the yardstick

In Germany, the leading guideline for the safety of nurse call systems is the DIN VDE 0834. Although it might not be legally binding, it is the reference that defines the “state-of-the-art” in a court of law and thus sets the minimum requirements to be adhered to – regardless of what technology is being used.

a. Fields of application

Call function has priority

The DIN VDE 0834 features two fields of application (A and B) according to the degree of risk patients are exposed to in the event of failures. The B field of application usually applies to medical facilities since it provides options for the connection of medical devices and for the operation of a nurse call system in intensive care units or in high security areas (prisons). The call function is primary in this context, with all other functions and services being secondary.

b. Networking

Reliability and emergency operation

The transmission lines in a nurse call system may be shared by other systems only on condition that: “[...] It is particularly ensured that the call system is not affected by faults in third-party systems.” In other words: The primary alarm cannot be carried out over the general data network without further ado. This would not even be permissible in areas where 99.9% of availability seem to be sufficient, such as in areas exclusively designated for the provision of care.

Szenarien 1 und 2

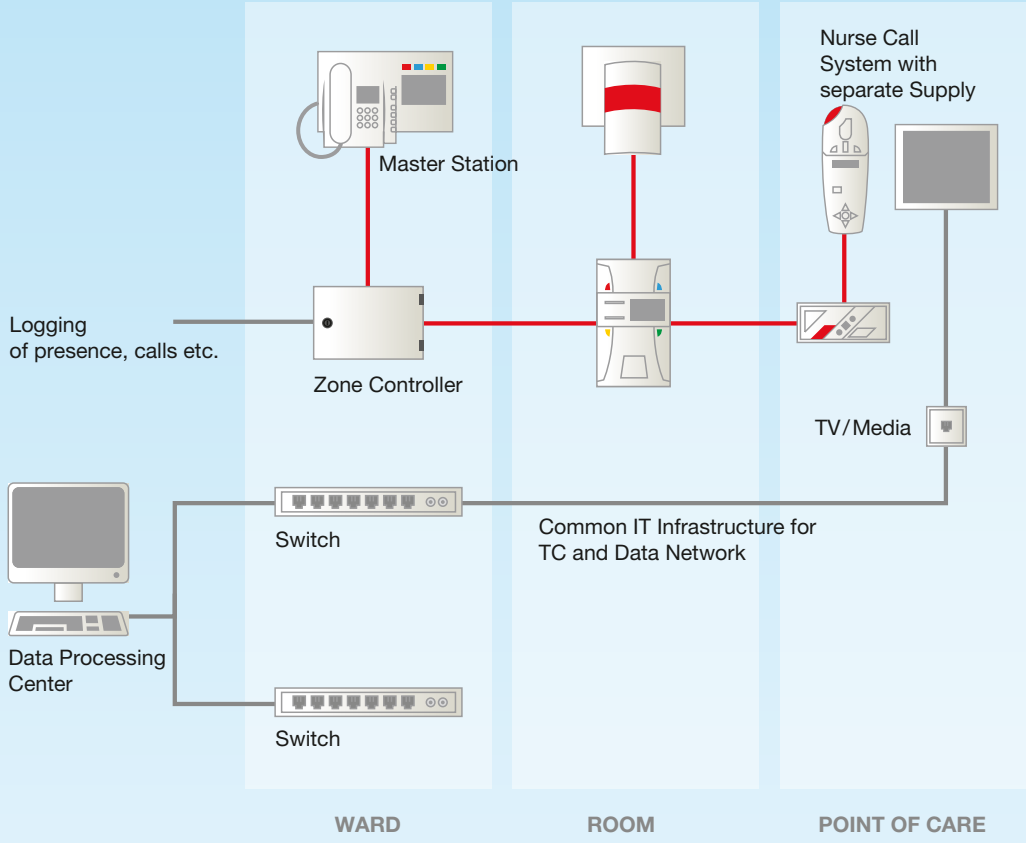

Separate power supply for the call system

The nurse call system has a separate, independent supply network which is fed with an individual power supply and is supported by means of UPS modules (**U**ninterruptible **P**ower **S**upply) in case of power failure. All value added services using the “usual” Ethernet and/or the TC infrastructure are only executed as an add-on for the respective terminal device.

PROS

- The standard is reliably fulfilled both within and between wards
- Highest safety level with minimal effort, even for long-term solutions
- Long-term use of the nurse call system, independently of innovation cycles of other disciplines
- IT and TC services available at the terminal device

CONS

- Proprietary supply network required
- Integrated servicing concept only possible with service PC
- No integrated terminal device for nurse call, multimedia and telephony
- No process support via broadband

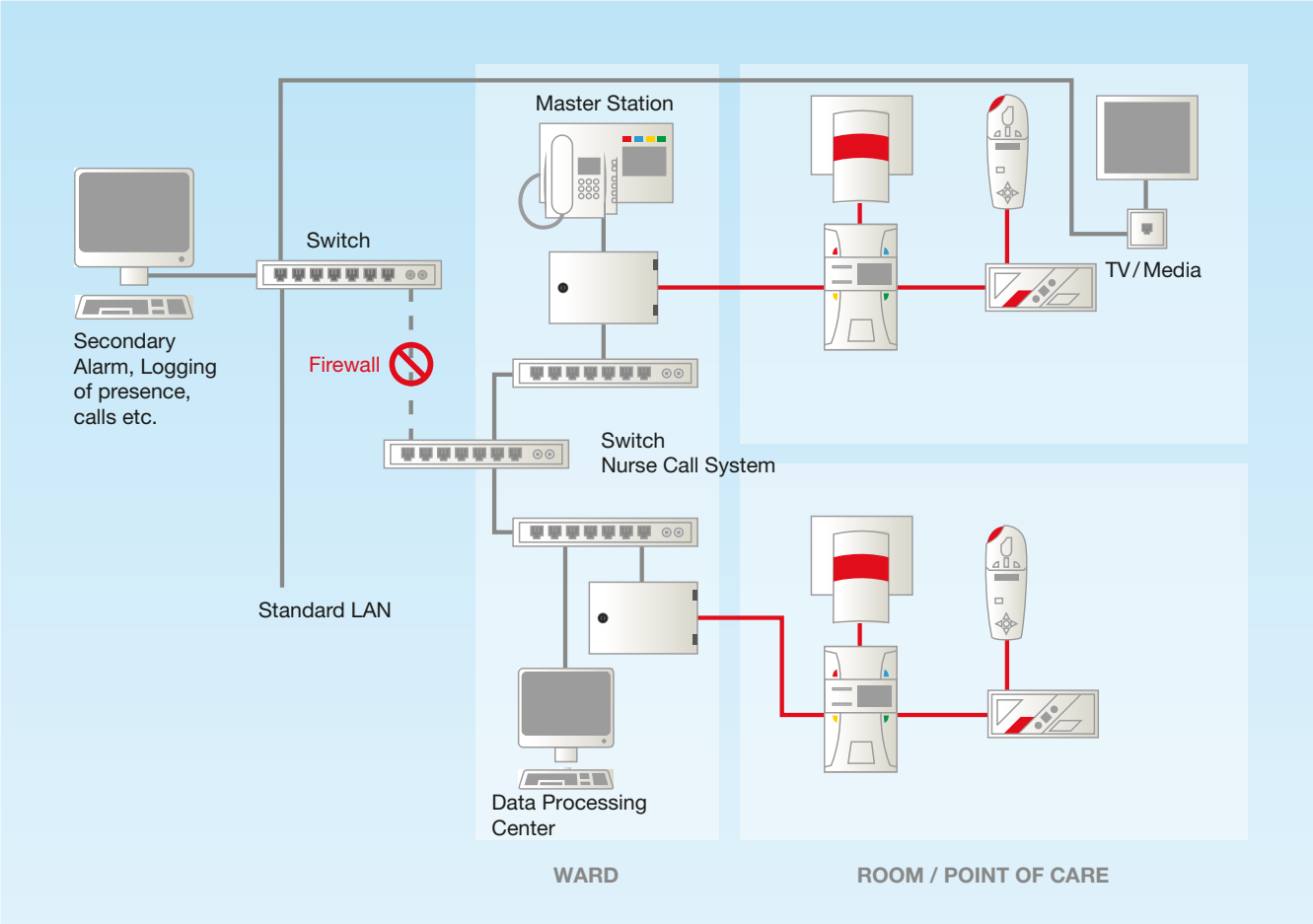

2

Dedicated IT network for cross-zone networking

Several zones (e.g. different buildings) are interconnected over standard network infrastructures in compliance with DIN 0845 (surge protection). The central networking of the call system is made over available IT network structures in compliance with EN 50173 by using dedicated network components (switches, routers etc.). All components are clearly and unambiguously labeled (incl. sockets, patch cables etc.), approved by the manufacturer and equipped with a separate circuit (with separate UPS).

PROS

- The standard is reliably fulfilled within the ward
- Value added services (internet, Video on Demand...) via LAN infrastructure at the point of care
- Use of standard network components in order to network wards and/or buildings

CONS

- Separate terminal devices for nurse call, multimedia, telephony
- Different life cycles of nurse call systems and IT network components

Nurse call systems used in care environments must always work flawlessly. Yet is a separate supply network actually necessary for this? After all, modern care communication uses numerous other functions which are network-based. A closer look at the DIN VDE 0834 standard gives insight into the possibilities of connecting nurse call and LAN according to standards.

Flexibility and investment security

In hospitals and care facilities a trend towards the convergence of systems is clearly discernible. At the same time costs are ever increasing in the public health services. This is where standardized infrastructures play an important role in terms of savings: If IT, telecommunication, nurse call system, medical technology, building control technology and other systems could be operated with standard components, expenses for wiring and ICT (**I**nformation, **C**ommunication and **T**echnology) would decline. Even operation and maintenance costs of the networks could be lowered. On a long-term basis integrated systems would additionally adjust more flexibly to future requirements and offer more investment security.

New sources of income

At the same time, a common IT landscape provides an opportunity for the generation of concise added values - for patients, personnel and operators of hospitals and care facilities. Value added services such as multimedia, Video on Demand, IPTV or Internet for example are brought to the patients' bedsides with only a minimum of effort. This increases the level of comfort for patients and residents and creates additional sources of income.

Safety and process optimization

Another advantage of common networking via IP: All functions and services are combined directly at the Point of Care (patient environment), ideally in one intelligent terminal device which makes the operation as well as the service, exchange and expansion of the terminal devices significantly easier. Many options for the optimization of care processes are thus created right at the point of care. Automatic presence logging, electronic documentation at the patient's bedside and targeted call forwarding ease the amount of routine work carried out by the staff. This simultaneously raises the level of security during the whole care process as well as during revisions. Eventually the patient's safety must also be 100% reliable with IP-based solutions.

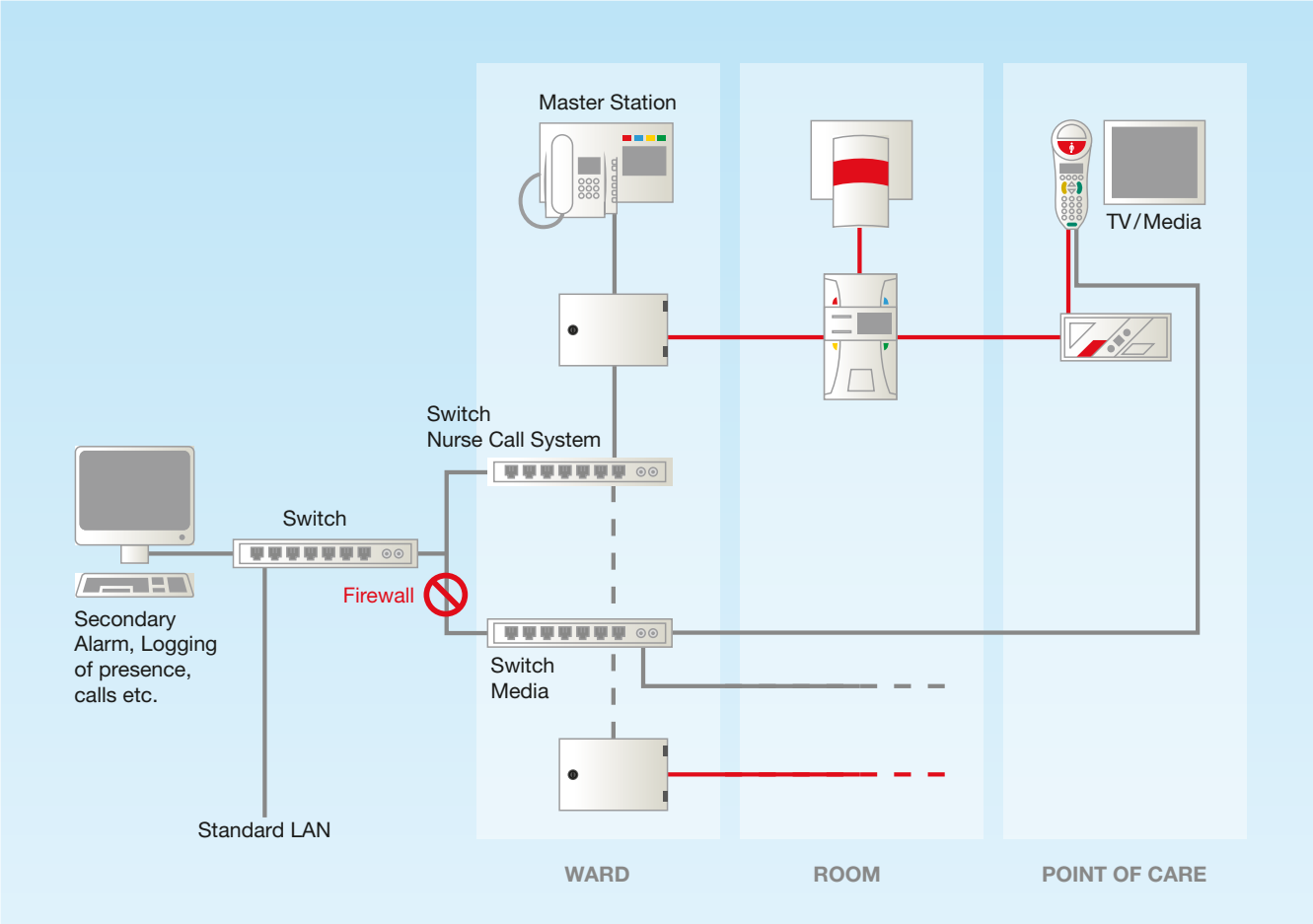

3

Use of hybrid cabling for cross-zone networking

The nurse call system function is realized in compliance with the standard via a bus line while the value added services reach the point of care over standard network infrastructures and, where appropriate, already existing lines. Both cables end at an integrated terminal device.

PROS

- Standard is fulfilled and helps to minimize resources (ward)
- Integrated terminal devices for individual equipment and convenience
- Added values and process optimization at the point of care via EPA, care documentation among others
- Use of LAN/WAN networks for non-critical applications; option for full IP structures

CONS

- Different life cycles of nurse call systems and IT components

Recommendations

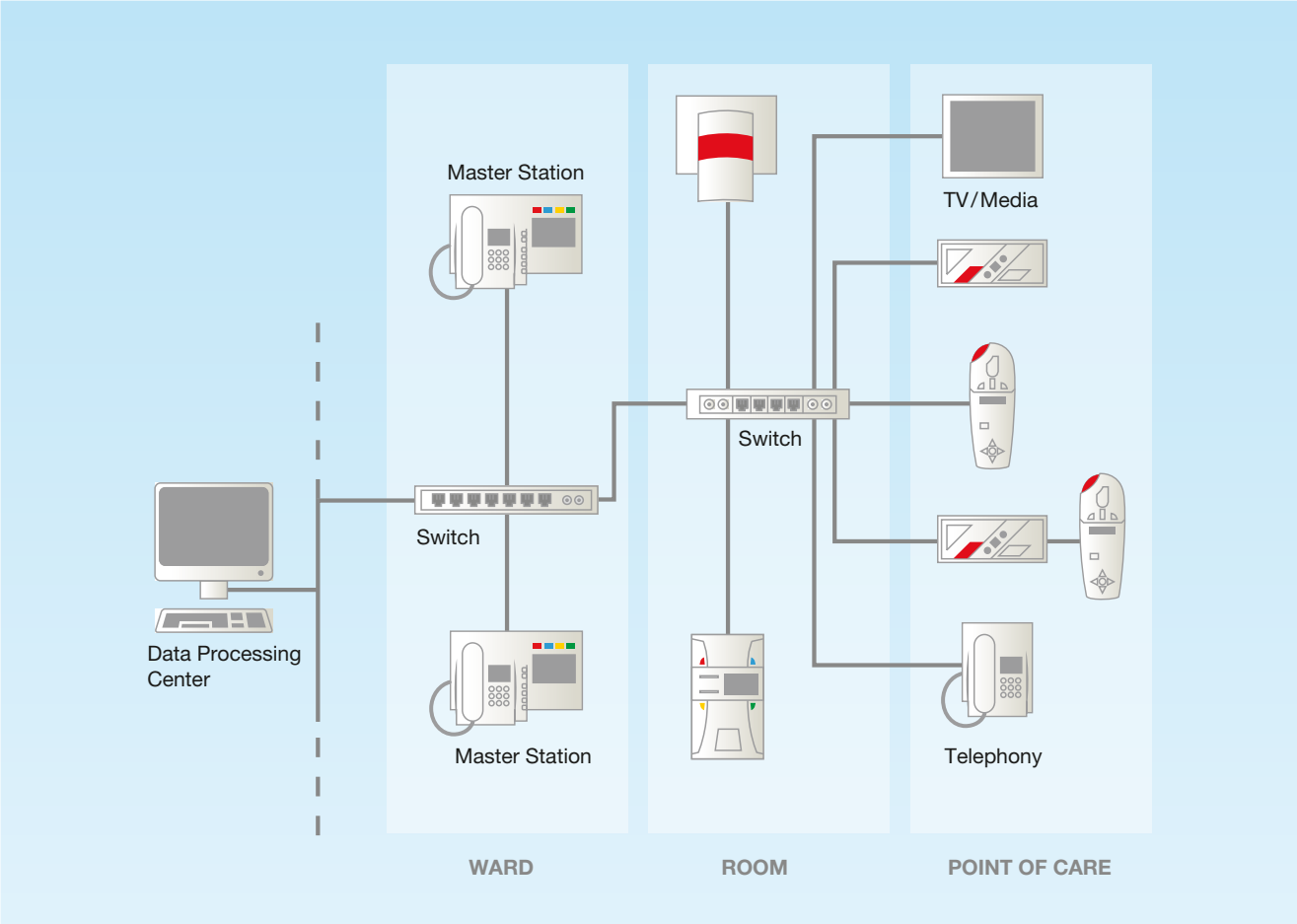

4

Direct connection to common IT infrastructure

All nurse call system components use the building's standard network infra- structures. The call function is transmitted over the same switch as are value added services, multimedia etc. to reach the point of care. A proprietary net- work for the nurse call system does not exist. Safety standards should be created through QoS (**Q**uality **O**f **S**ervice)-capable active components, fault-tolerant redundant protocols and containment of subnetworks (per VLAN, VPN etc.). Sufficient personnel are available at any time, call escalation is carried out via the IT network.

PROS

- Minimizes redundancies in the infrastructure
- Simplifies service, maintenance and spare part stock
- Increases added values and optimizes processes through broadband connection at every bedside

CONS

- High-level responsibility for the operator liable to guarantee a consistent level of quality for both network and service
- High life cycle costs due to short product cycles
- Costly (emergency) power supply required

c. Electrical isolation

Secure installation

The safety specifications of the DIN VDE 0100 and 0107 standards must be adhered to during the planning and installation of the nurse call system to prevent any dangerous shock currents. The EN 60601 also plays an essential role in secondary alarms in medical-technical devices over nurse call systems. A reliable electrical isolation is the main requirement in this respect, even in bathrooms and intensive care areas.

d. Behavior during malfunction

Fault protection

As a general rule, fault messages have to be unambiguous to the staff. Moreover, the call indication via corridor lamp has to be in working order at all times as a final safety level of sorts. For type B security zones the following condition has to be fulfilled additionally:

"Larger call systems are to be subdivided into separate zones, independent of each other, to cover a maximum area of one station. Faults in one of these zones must not affect the remaining sections."

Using chances – minimizing risks

Responsibility for liability I

In order to use standardized infrastructures for nurse call systems, such solutions must be able to provide the same safety standard as a completely autonomous installation. The underlying reason for this: The DIN VDE 0834 is consulted for liability assessment. In this case the operator of the system – along with the planner and the installer - has to prove that the damage is not to be attributed to technical reasons. The operator must be able to document (among other things) that

- the nurse call system was in flawless working condition (this includes call forwarding and prioritization of calls)
- interference by other systems was ruled out
- danger due to non-standard installation was ruled out
- organizational shortcomings were ruled out at the time of the event (short-handed staff situation, call escalation etc.)

Security and risk management

Problems may arise, for example, if components were used which the manufacturer did not approve. However, structured cabling can be intelligently used for the reliable operation of nurse call systems. One possible strategy would be to ensure the flawless operation of such a system by means of continuous risk management. This approach is based on the IEC 80001 dealing with the reliability of medical devices as parts of IT networks in general – but not with nurse call systems as such. Nevertheless, it seems to make sense to bundle the competences and responsibilities for technical reliability into one, even if additional organizational efforts are required.

The following pages show the schematics of four scenarios for the integration of nurse call systems and IT networks (no explicit cabling schematics). An overview of advantages and disadvantages helps to easily compare the safety levels and added values of the individual solutions.

Scenarios 3 and 4